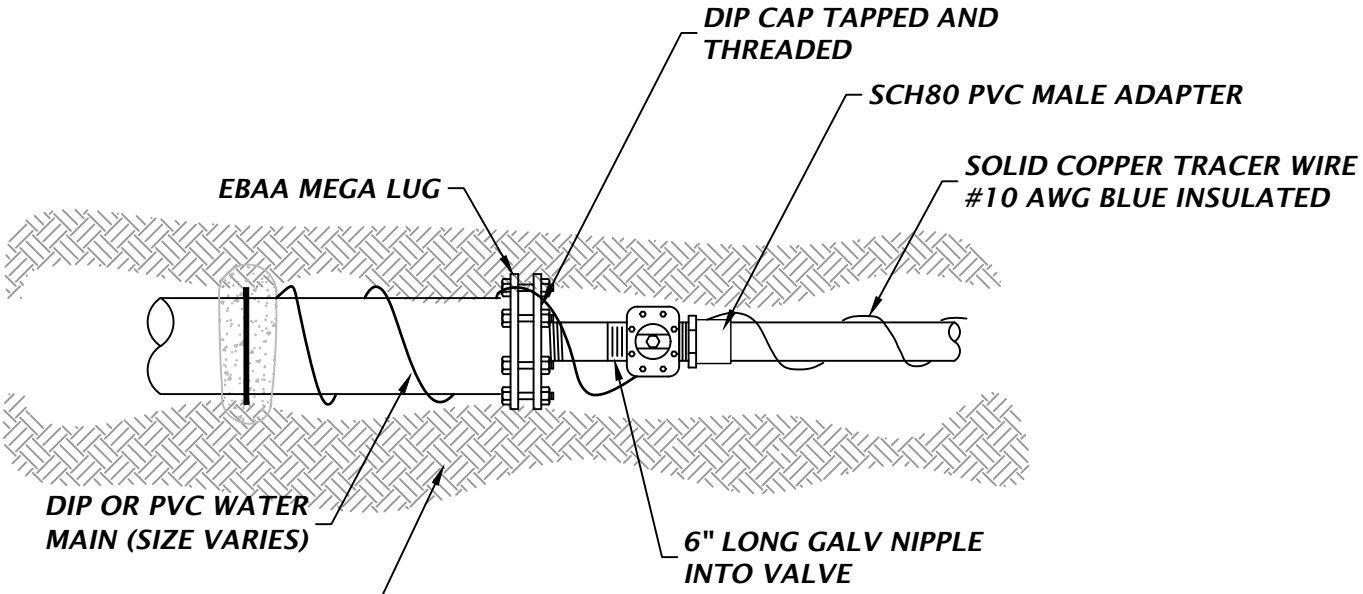

PLAN

127

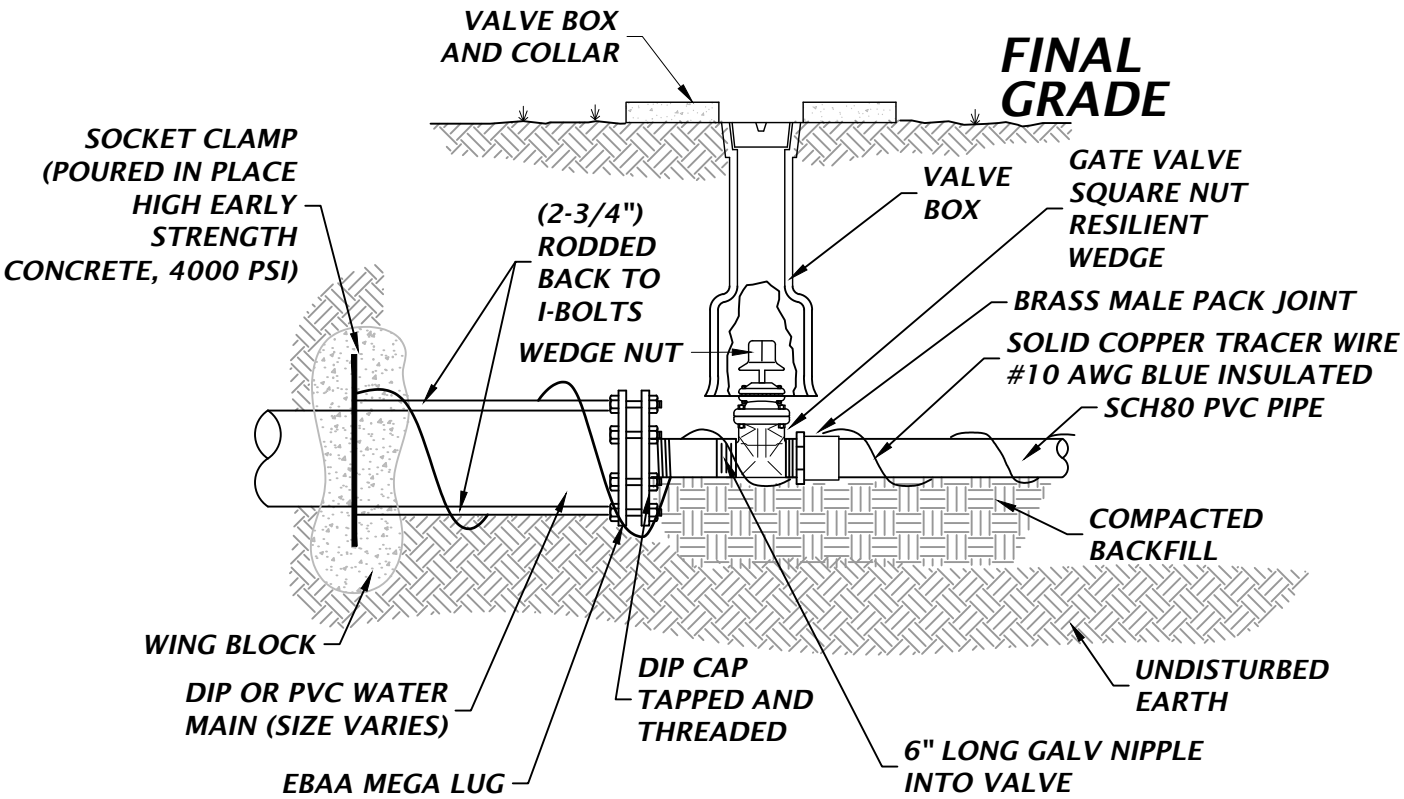

PROFILE

124

WATER MAIN REDUCTION OF LINE SIZE

NTS

City of ALACHUA public services