GENERAL NOTE:

A. DURING CONSTRUCTION, PROVIDE TEMPORARY PROTECTIVE FENCE AROUND METERS AS PER 324.

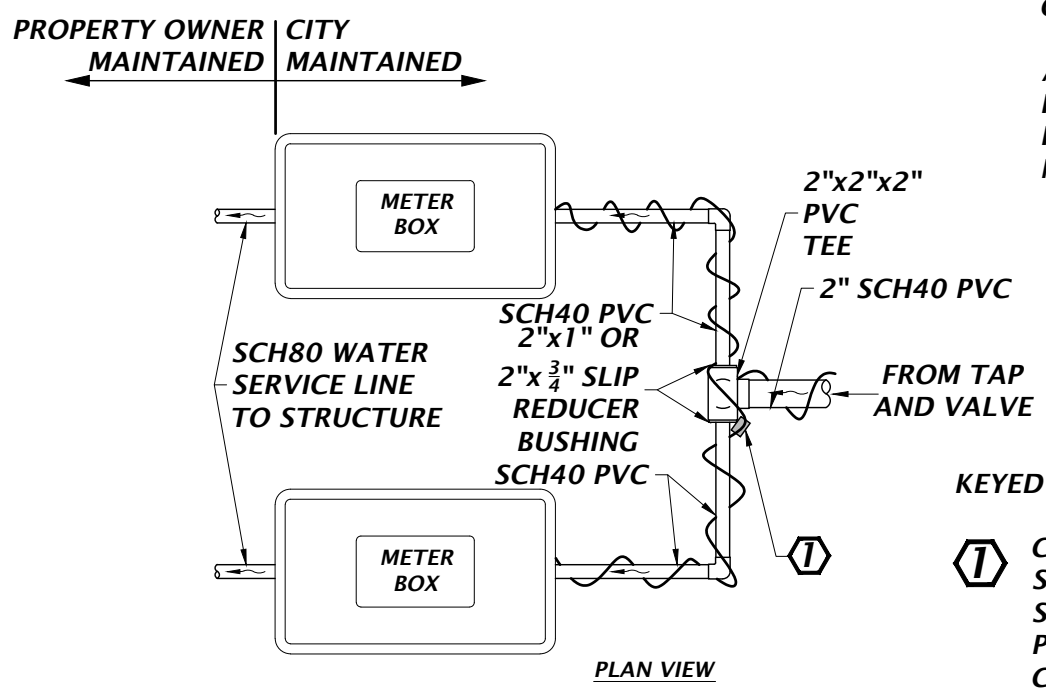

KEYED NOTE(S):

1. CONNECT TRACER WIRES FROM SERVICE TO MAIN AND FROM SERVICE TO SERVICE WITH PRO-LINE TRACER-LOCK CONNECTORS. PART # TL-LUG-SS.

2. PROVIDE ENOUGH TRACER WIRE SO IT CAN EXTEND AT LEAST 8-INCHES ABOVE METER BOX.

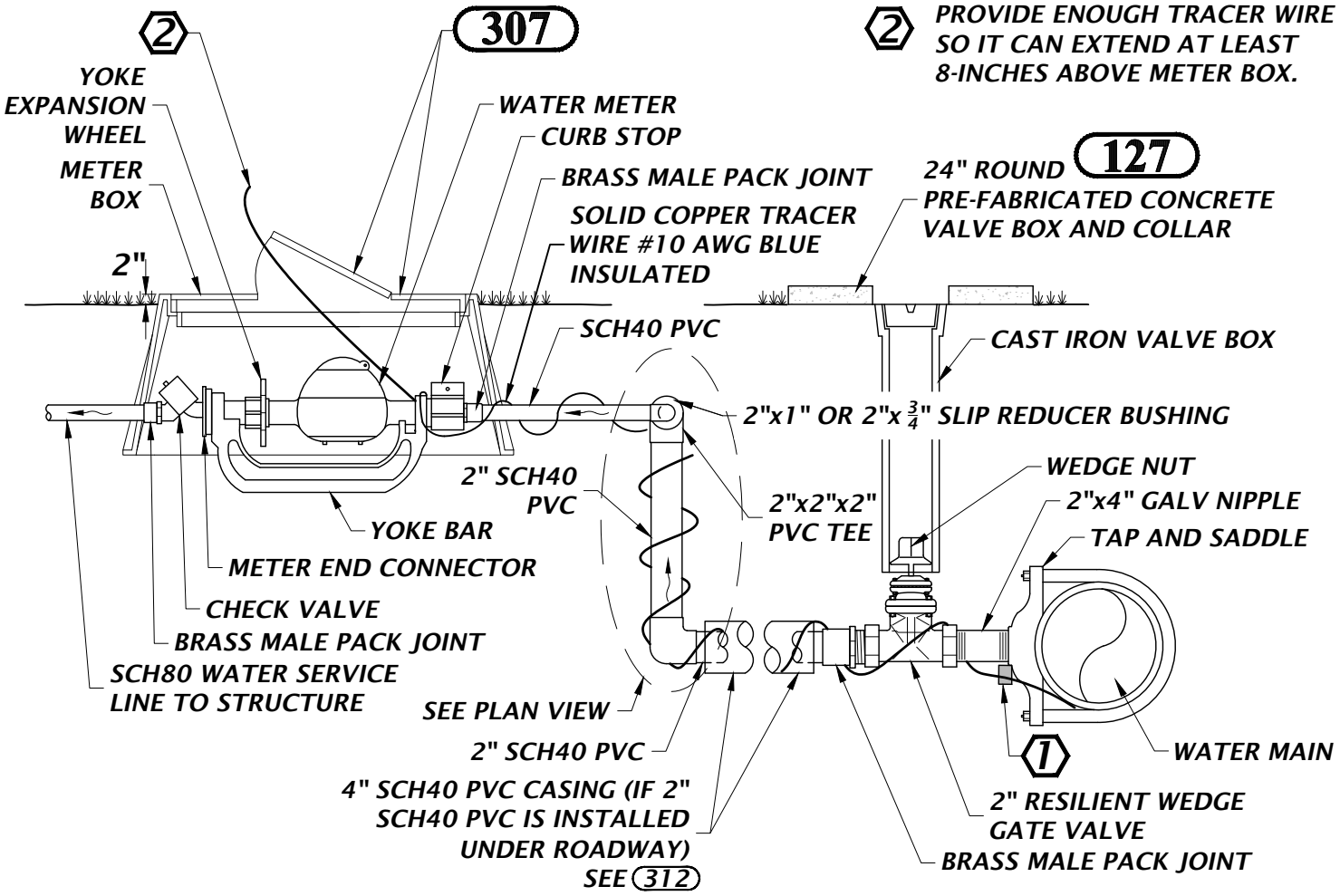

130

DUAL WATER SERVICE CONNECTION

NTS

City of ALACHUA public services