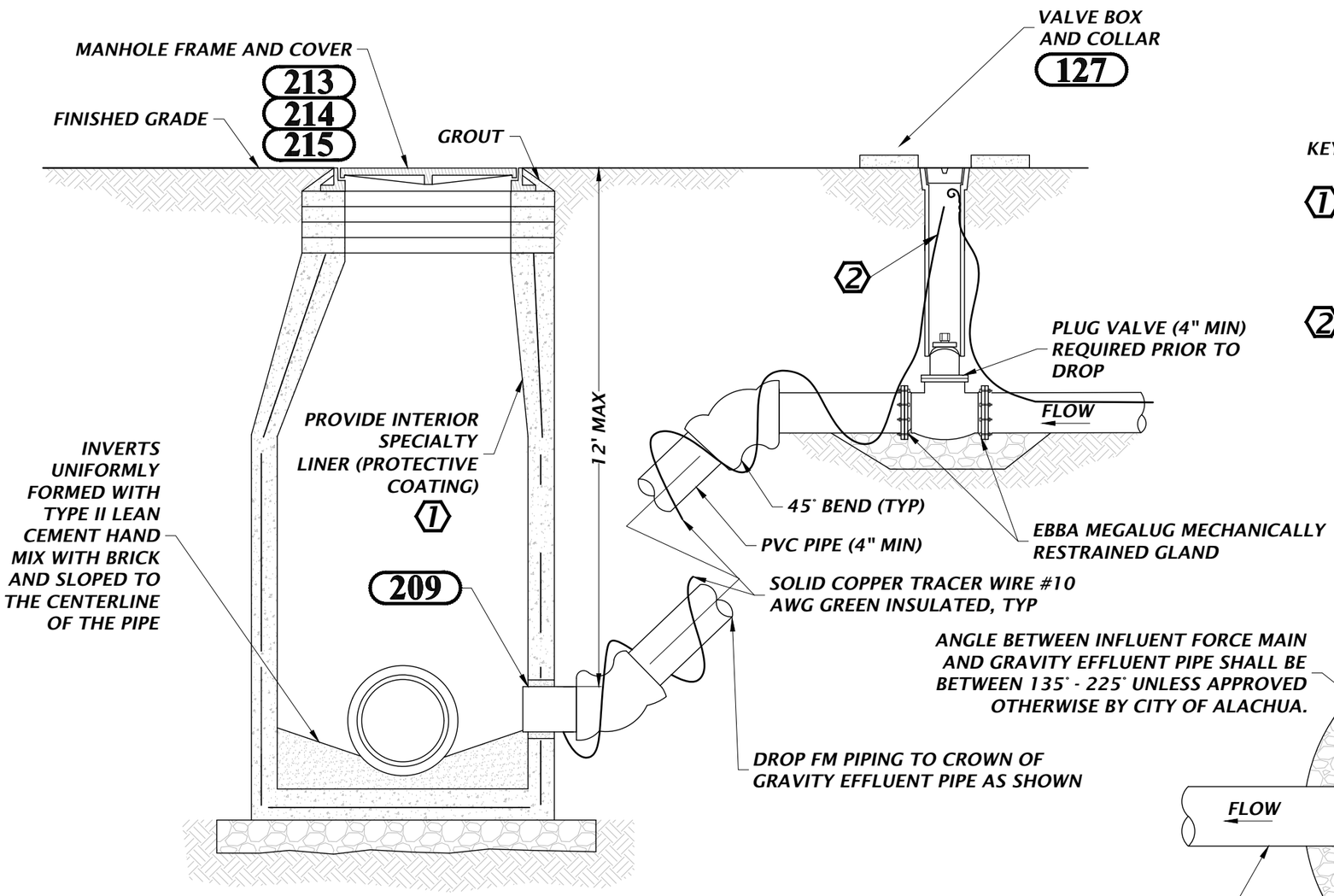

SECTION

KEYED NOTE(S):

1. FOR NEW MANHOLES, PROVIDE AGRU SURE-GRIP YELLOW 3.0 MM THICK LINER. FOR EXISTING MANHOLES, PROVIDE RAVEN 405 EPOXY COATING. FURNISH AND INSTALL THESE PRODUCTS AS PER LATEST VERSION OF CITY OF ALACHUA, PUBLIC SERVICES, REQUIREMENTS FOR DESIGN AND CONSTRUCTION.

2. VALVE BOX MAY SERVE AS ACCESS POINT FOR TRACER WIRES. PROVIDE ENOUGH LOOPED TRACER WIRE SO IT CAN EXTEND AT LEAST 8-INCHES ABOVE GRADE.

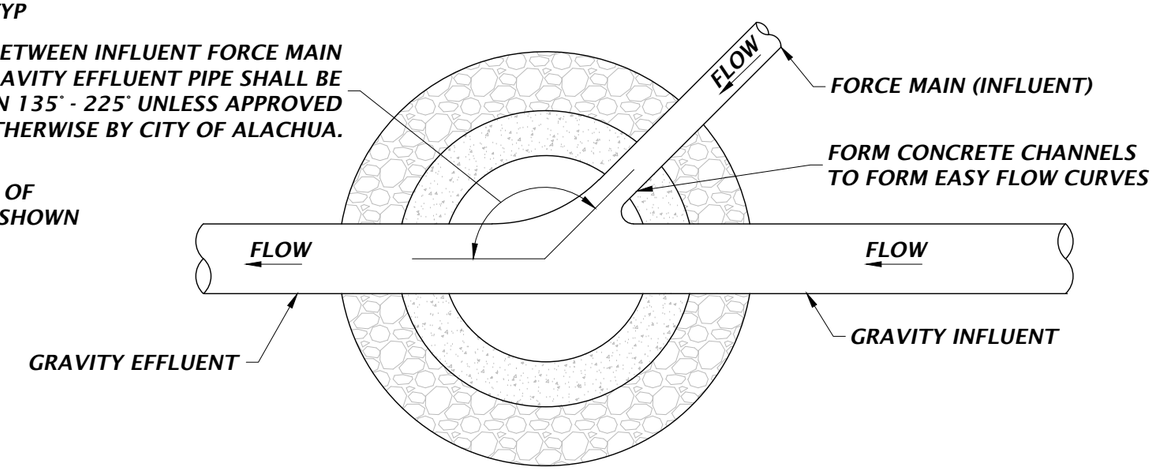

PLAN

206

MANHOLE FORCE MAIN CONNECTION

NTS

City of ALACHUA public services