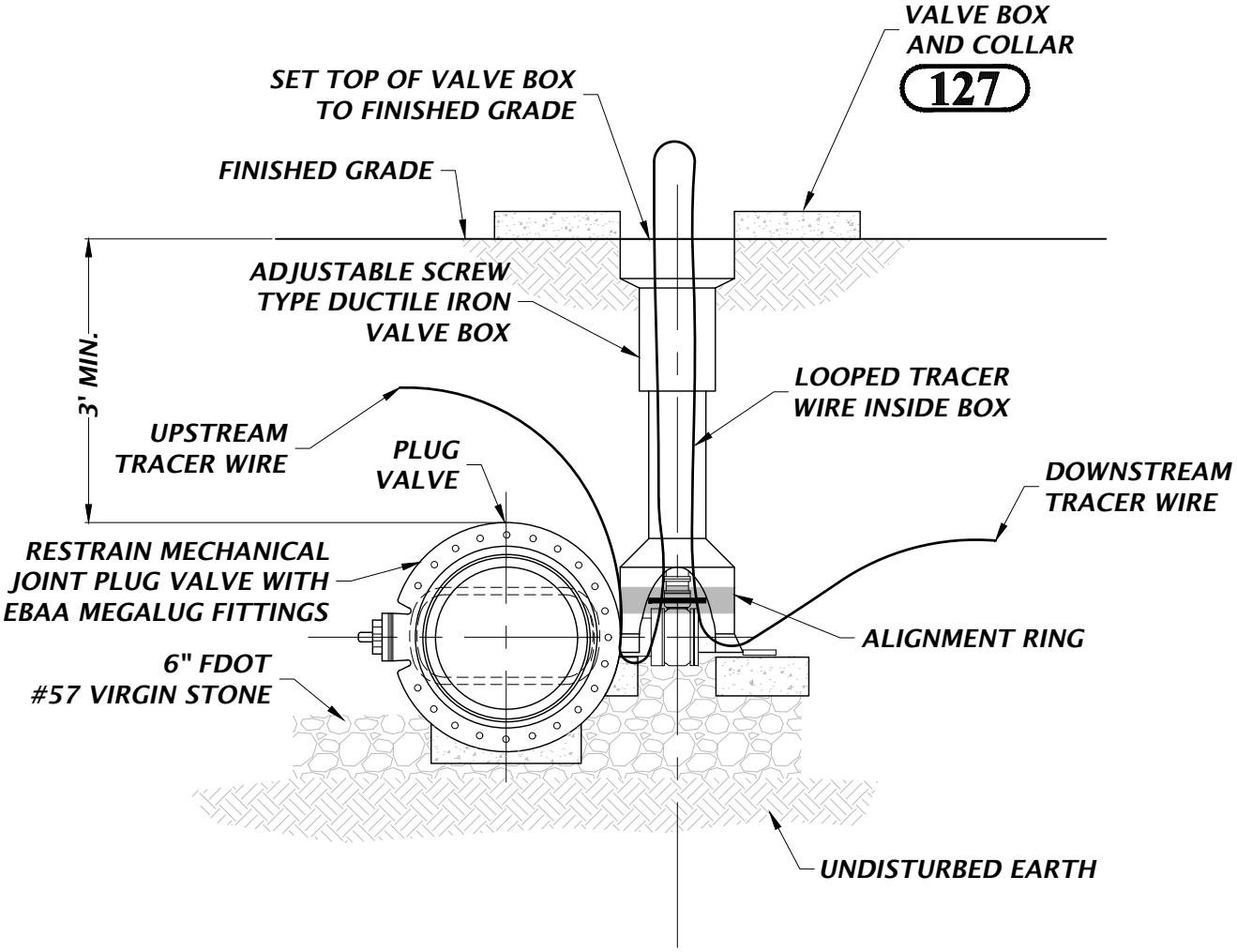

GENERAL NOTES:

1. *THE VALVE ACTUATING NUT SHALL BE EXTENDED UP TO BE WITHIN 3' OF FINISHED GRADE.*
2. *PROVIDE A PLASTIC DEBRIS SHIELD / ALIGNMENT RING THAT INSTALLS BELOW THE VALVE ACTUATING NUT. THIS SHIELD SHALL CENTER THE RISER PIPE BOX OVER THE ACTUATING NUT AND MINIMIZE INFILTRATION.*
3. *FOR NEW CONSTRUCTION, THE VALVE BOX SHALL BE ADJUSTED TO MIDRANGE TO ALLOW FOR FUTURE BOX ADJUSTMENTS.*
4. *VALVE BOX SHALL BE SET ON SOLID COMMON BLOCKS.*
5. *PVC EXTENSION SHALL NOT BE USED ON VALVE BOX INSTALLED.*
6. *LETTER VALVE BOX LID WITH "WW FORCE MAIN"*
7. *VALVE BOX MAY SERVE AS ACCESS POINT FOR TRACER WIRES. PROVIDE ENOUGH LOOPED TRACER WIRE SO IT CAN EXTEND 8 INCHES ABOVE GRADE.*

207

PLUG VALVE FOR WASTEWATER FORCE MAIN 4" OF LARGER

NTS

City of ALACHUA public services